Acme Sanitary Ware Co. Ltd.
Since 1949
1/F, Acme Building, 22-28 Nanking Street, Kowloon, Hong Kong
Tel: 2388 7171 Fax: 2710 8012
Email: acme@acmesanitary.com.hk
Website: www.acmesanitary.com.hk

stern

PROJECT		REF		REV	ITEM CODE	
LOCATION		DATE			PAGE	

SANITARY WARE SPECIFICATION SHEET

Item Descriptions	Stern (Israel) "Csaba" Chrome plated deck mounted sensor electronic faucet in 9V DC Supply with **IP67 waterproof battery box**
Dimensions	L109 x W25 x H255 mm
Model	Csaba B
Code Number	233000
Finish	Chrome Plated
Supplier	Acme Sanitary Ware Co. Ltd Mr. Eric Wong/ Mr. Wilson Hung
Contact Tel/Fax	(852) 2388-7171 / (852) 2710-8012
E-mail	acme@acmesanitary.com.hk
Website	www.acmesanitary.com.hk

Illustration/ Drawing

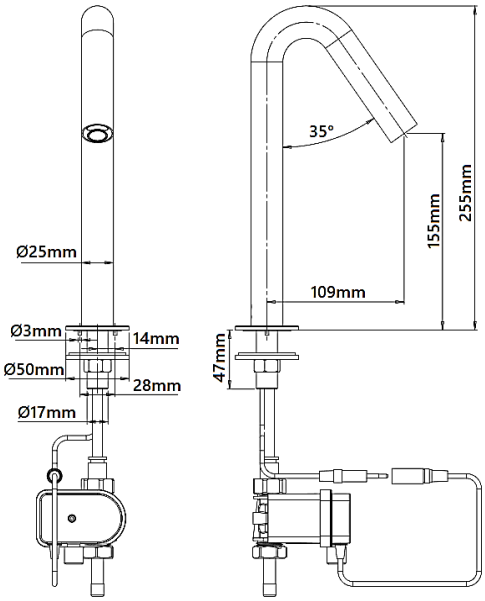

Csaba B Ref # 233000
Touch-free deck-mounted electronic faucet. For cold or premixed water. Chrome plated body, other finishes available. Powered by dual power input box with a 9V battery (battery not included). Activated by a concealed sensor built into the spout. Filter included. Sensor includes a low battery indicator. Adjustable settings by remote control: sensor range, security time, delay in, delay out, on-off and reset to factory settings.

Application:
Touch-free electronic faucet. The faucet is automatically activated when users place their hands in the sensor range and stops when the users remove their hands.

Use:
Combining an elegant design with vandal-resistant eatures. Easy installation. Long lasting even in the harshest installation sites. Helps washrooms stay clean and saves water. Prevents cross contamination. Ideal for offices, hotels and restaurants.

PRODUCT AT A GLANCE	
Installation	Deck mounted
Power Supply Options	• IP67 Dual power input box with a 9V battery (battery not included) • IP67 Dual power input box with a 9V transformer
Operating pressure	0.5 - 8.0 BAR (7 - 116 PSI). With a pressure over 8 bar, use a pressure reducing valve.
Water supply	Cold or premixed water
Water Saving options	4 LPM / 1.0 GPM - PCA spray
Water temperature	70°C Maximum
Security Time	Auto shutoff after 90 seconds. adjustable by remote control

ORDERING INFORMATION

MODER	CODE	POWER
Csaba B	233000	IP67 Dual power input box with a 9V battery (battery not included)
Csaba E	233010	IP67 Dual power input box with a 9V transformer

OPTIONS

OPTION	CODE
Remote Control	07100005

Installation:
Lavatory mounted

Water supply:
Cold or premixed water (1 inlet)

Water temperature:
Max 70 °C

Operating pressure:
0.5 - 8.0 bar

Power source:
IP67 Dual power input box with a 9V battery

** All information of the above is for the reference only. No prior notice is made if any changes.*

Acme Sanitary Ware Co. Ltd.
Since 1949
1/F, Acme Building, 22-28 Nanking Street, Kowloon, Hong Kong
Tel: 2388 7171 Fax: 2710 8012
Email: acme@acmesanitary.com.hk
Website: www.acmesanitary.com.hk

stern

SPARE PARTS LIST

Csaba B
(233000)

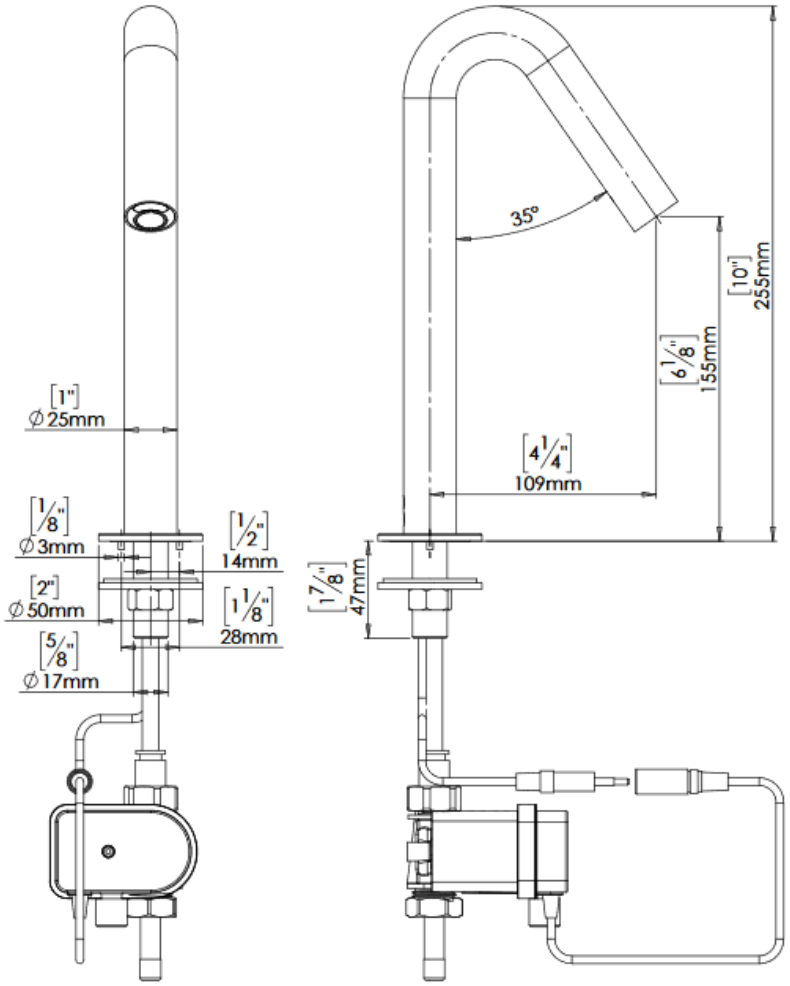

SPARE PARTS LIST

Seals and Screws Kit	07210184
10-Pack Sensor Kit	08008006
10-Pack Solenoid Valve Kit	07232005
Filter	08530013
Dual Power Input Box (excluding solenoid and battery)	06530042
Remote Control 13B (Optional)	07100005
Soap & Water Remote Control (Optional)	07100014

Note: In order to locate the relevant spare part, please check the corresponding parts and part mumber in the drawing. Minimum order quantity will be required.

** All information of the above is for the reference only. No prior notice is made if any changes.*

Since 1949
Acme Sanitary Ware Co. Ltd.
1/F, Acme Building, 22-28 Nanking Street, Kowloon, Hong Kong
Tel: 2388 7171 Fax: 2710 8012
Email: acme@acmesanitary.com.hk
Website: www.acmesanitary.com.hk

stern

INSTALLATION

STEP 1 – PREPARATION FOR MOUNTING THE FAUCET

1. Shut off the water supply.

2. Remove the hexagonal nut, disk and washer. Do not remove the O-ring from the base of the faucet.

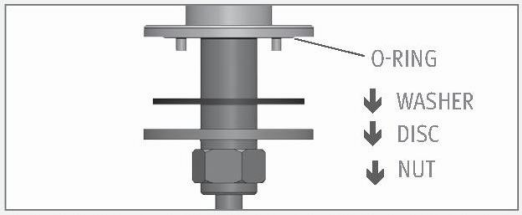

3. For Csaba 1000B/E drill a hole in the counter for the mixing handle. Remove the nut, disk and seal.

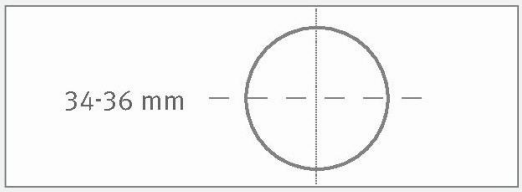

STEP 2 – INSTALLING THE FAUCET

1. Place the faucet with O-ring into the hole in deck or lavatory. Make sure the O-ring is located between the deck or lavatory and the bottom of the faucet.

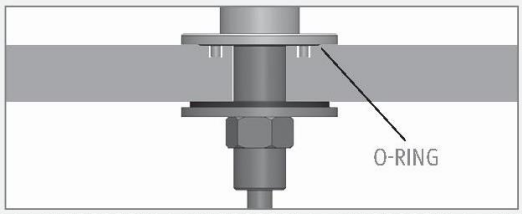

2. Slide the washer, disk and hexagonal nut over the flexible hose and secure the faucet into place.

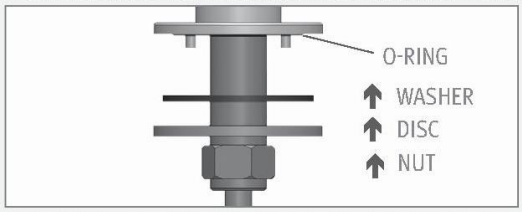

3. For Csaba 1000B/E
   Place mixer in the hole and secure with nut, disk and seal. Ensure the mixer is aligned properly

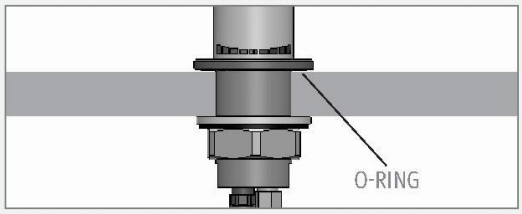

4. 1. Connect hot and cold inlet hoses to the water mains.
   2. Connect the outlet from mixer hose to the Dual Power Input Box

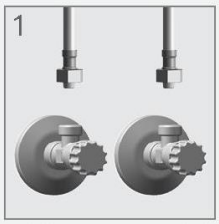

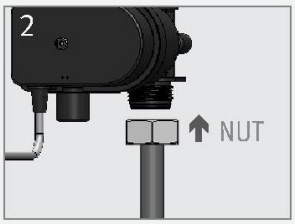

Since 1949
Acme Sanitary Ware Co. Ltd.
1/F, Acme Building, 22-28 Nanking Street, Kowloon, Hong Kong
Tel: 2388 7171 Fax: 2710 8012
Email: acme@acmesanitary.com.hk
Website: www.acmesanitary.com.hk

stern

INSTALLATION

STEP 3 – CONNECTING THE WATER SUPPLY

NOTE: Flow direction is denoted by the arrow on the solenoid housing.

1. Connect the Nipple and FILTER on the inlet side of the solenoid.
2. Connect the quick connector on the outlet side of the solenoid.
3. Connect the dual power box to the water supply lines.
4. Connect the black flexible tube to the quick connector on the top of the dual power box.
5. For battery versions: Place battery into the Dual Power input box.

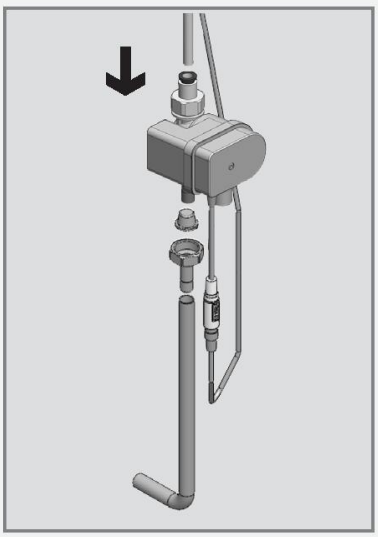

STEP 4– CONNECTING THE POWER SOURCE

1. Turn on the central water supply. Check for leaks.
   Remove the protective sticker from the sensor.
2. Connect the power source.
3. Once the power source is connected, wait 15 seconds to allow the system to set the ideal sensor range. A LED will flash continously to indicate this adjustment period. The solenoid valve will open for 1 second to indicate that the ideal sensor range was set.

4. If the automatically adjusted sensor range is not satisfactory to your purposes, please refer to the section entitled “Settings adjustment”.

Since 1949
Acme Sanitary Ware Co. Ltd.
1/F, Acme Building, 22-28 Nanking Street, Kowloon, Hong Kong
Tel: 2388 7171 Fax: 2710 8012
Email: acme@acmesanitary.com.hk
Website: www.acmesanitary.com.hk

stern

TROUBLESHOOTING

PROBLEM	INDICATOR	CAUSE	SOLUTION
No water coming out of the faucet:	1. Sensor flashes continuously when user's hands are within the sensor's range.	Low battery.	Replace battery
	2. LED in the sensor does not flash once when user's hands are within the sensor's range.	1. Range is too short.	Increase the range
		2. Range is too long.	Decrease the range
		3. Battery is completely used up	The battery must be replaced.
		4. Unit is in "Security Mode"*	
		5. Sensor is picking up reflections from the washbasin or another object.	Eliminate cause of reflection.
	3. LED in the sensor flashes once when user's hands are within the sensor's range.	1. Connectors between the electronic unit and solenoid are disconnected.	Connect the electronic unit connectors to the solenoid.
		2. Debris or scale in solenoid.	Unscrew solenoid, pull out the plunger and the spring from the solenoid and clean them. Use scale remover material if needed. When replacing the plunger, please make sure that the spring is in vertical position.
		3. The central orifice in the diaphragm is plugged or the diaphragm is torn	Clean the orifice or replace diaphragm.
		4. The water supply pressure is higher than 8 bar.	Reduce the supply water pressure.
		5. The water supply pressure is under 8 bars and yet the pressure in the faucet's body is higher. This situation could be caused by a sudden increase in the water supply pressure that the back check prevents from dropping, even after water supply pressure drops under 8 bars.	Shut off water supply and unscrew one of the flexible pipes in order to reduce the pressure that blocks the product.
Water flow from spout does not stop:	1. Sensor flashes once when user's hands are within the sensor's range.	1. Debris or scale in diaphragm	Clean the orifice or replace diaphragm.
	2. LED in the sensor does not flash once when user's hands are within the sensor's range.	1. Sensor is dirty or covered.**	Clean or eliminate case of interference.
		2. Sensor is picking up reflections from the washbasin or another object.	Decrease the range or eliminate cause of reflection.
Water flow diminished		Filter or aerator is clogged	Remove, clean, re-install

* "Security Mode": If the sensor is covered for more than 90 sec. the faucet will automatically shut off water flow.
To return to normal operation remove any blockage.

** In this case, the water flow will stop anyway after 90 seconds because of the security time.